# dyson v6 absolute

## OPERATING MANUAL

## ASSEMBLY

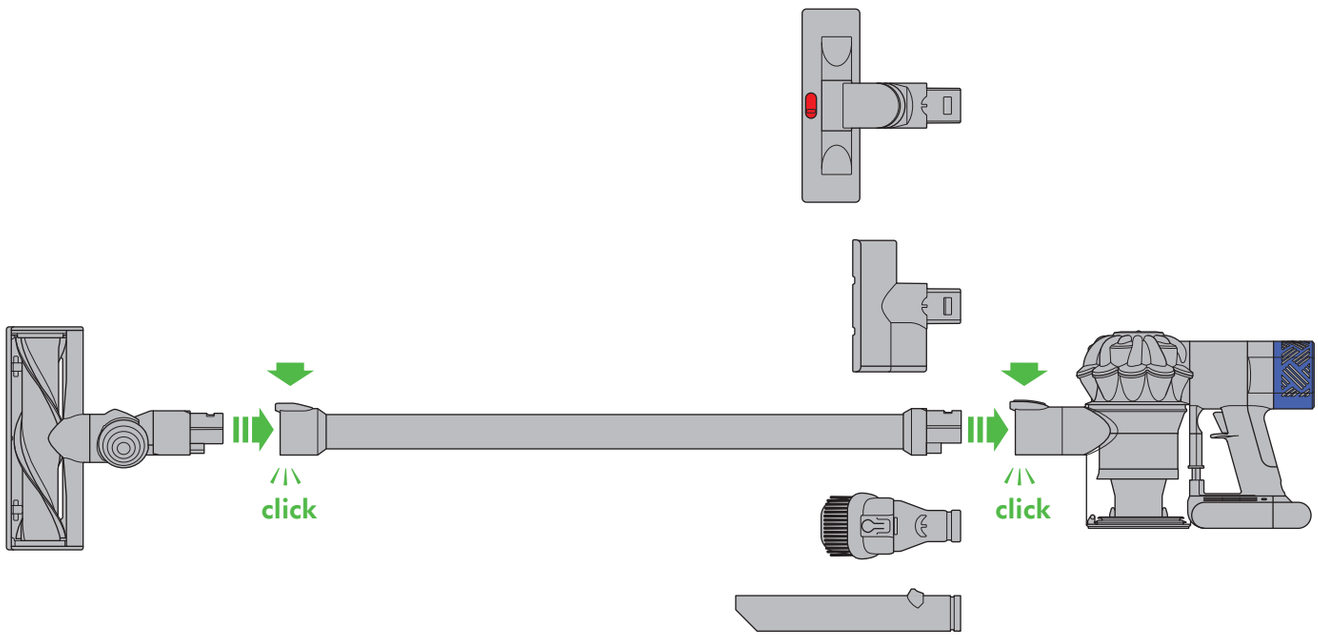

### WASH FILTERS

Wash filters with cold water at least every month.

### REGISTER YOUR FREE 2 YEAR GUARANTEE TODAY

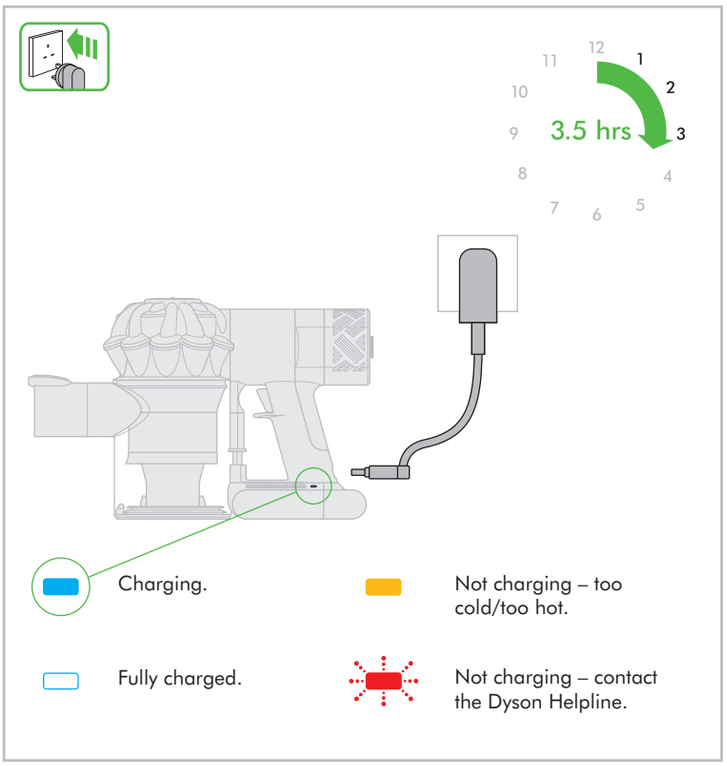


SV05

## DYSON CUSTOMER CARE

Thank you for choosing to buy a Dyson appliance
After registering your free 2 year guarantee, your Dyson appliance will be covered for parts and labour for 2 years from the date of purchase, subject to the terms of the guarantee. If you have any questions about your Dyson appliance, call the Dyson Helpline with your serial number and details of where/when you bought the appliance.
Most questions can be solved over the phone by one of our trained Dyson Helpline staff.

Alternatively, visit www.dyson.co.uk/support (UK) or www.dyson.ie/support (ROI) for online help, general tips and useful information about Dyson.

Your serial number can be found on your rating plate which is on the main body of the appliance behind the clear bin.
Note your serial number for future reference.

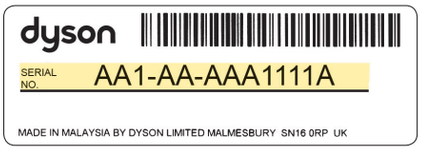


This illustration is for example purposes only.

## 3 EASY WAYS TO REGISTER YOUR FREE 2 YEAR GUARANTEE

### REGISTER ONLINE

Visit our website to register your full parts and labour guarantee online.

**www.dyson.co.uk/register**
**www.dyson.ie/register**

### REGISTER BY PHONE

Call our dedicated Helpline. Open Monday to Friday 8am-8pm & Saturday and Sunday 8am-6pm.

**UK: 0800 298 0298**
**ROI: 01 475 7109**

### REGISTER BY MAIL

Complete and return the form to Dyson in the envelope supplied.

# IMPORTANT SAFETY INSTRUCTIONS

BEFORE USING THIS APPLIANCE READ ALL INSTRUCTIONS AND CAUTIONARY MARKINGS IN THIS MANUAL AND ON THE APPLIANCE

When using an electrical appliance, basic precautions should always be followed, including the following:

## ⚠ WARNING

**These warnings apply to the appliance, and also where applicable, to all tools, accessories, chargers or mains adaptors.**

TO REDUCE THE RISK OF FIRE, ELECTRIC SHOCK, OR INJURY:

1. This Dyson appliance can be used by children aged from 8 years and above and persons with reduced physical, sensory or reasoning capabilities, or lack of experience and knowledge, only if they have been given supervision or instruction by a responsible person concerning use of the appliance in a safe way and understand the hazards involved. Cleaning and user maintenance shall not be made by children without supervision.
2. Do not allow to be used as a toy. Close attention is necessary when used by or near children. Children should be supervised to ensure that they do not play with the appliance.
3. Use only as described in this Dyson Operating Manual. Do not carry out any maintenance other than that shown in this manual, or advised by the Dyson Helpline.
4. Suitable for dry locations ONLY. Do not use outdoors or on wet surfaces.
5. Do not handle any part of the plug or appliance with wet hands.
6. Do not use with a damaged cable or plug. If the supply cable is damaged it must be replaced by Dyson, its service agent or similarly qualified person in order to avoid a hazard.
7. If the appliance is not working as it should, has received a sharp blow, has been dropped, damaged, left outdoors, or dropped into water, do not use and contact the Dyson Helpline.
8. Contact the Dyson Helpline when service or repair is required. Do not disassemble the appliance as incorrect reassembly may result in an electric shock or fire.
9. Do not stretch the cable or place the cable under strain. Keep the cable away from heated surfaces. Do not close a door on the cable, or pull the cable around sharp edges or corners. Arrange the cable away from traffic areas and where it will not be stepped on or tripped over. Do not run over the cable.
10. Do not unplug by pulling on the cable. To unplug, grasp the plug, not the cable. The use of an extension cable is not recommended.
11. Do not use to pick up water.
12. Do not use to pick up flammable or combustible liquids, such as petrol, or use in areas where they or their vapours may be present.
13. Do not pick up anything that is burning or smoking, such as cigarettes, matches, or hot ashes.
14. Keep hair, loose clothing, fingers, and all parts of the body away from openings and moving parts, such as the brush bar. Do not point the hose, wand or tools at your eyes or ears or put them in your mouth.
15. Do not put any object into openings. Do not use with any opening blocked; keep free of dust, lint, hair, and anything that may reduce airflow.
16. Use only Dyson recommended accessories and replacement parts.
17. To avoid a tripping hazard wind the cable when not in use.
18. Do not use without the clear bin and filter in place.
19. Do not leave the appliance when plugged in. Unplug when not in use and before servicing.
20. Do not pull or carry by cable or use cable as a handle.
21. Use extra care when cleaning on stairs. Do not work with the appliance above you on the stairs.
22. Turn off all controls before unplugging. Unplug before connecting any tool or accessory.
23. Always extend the cable to the red line but do not stretch or tug the cable.
24. Hold the plug when rewinding onto cable reel. Do not allow the plug to whip when rewinding.

# READ AND SAVE THESE INSTRUCTIONS

THIS DYSON APPLIANCE IS INTENDED FOR HOUSEHOLD USE ONLY

Do not use near naked flames.

Do not store near heat sources.

Do not pick up water or liquids.

Do not pick up burning objects.

Do not put hands near the brush bar when the appliance is in use.

## Power mode and run-time

To change the mode, hold the trigger down and press the max button.

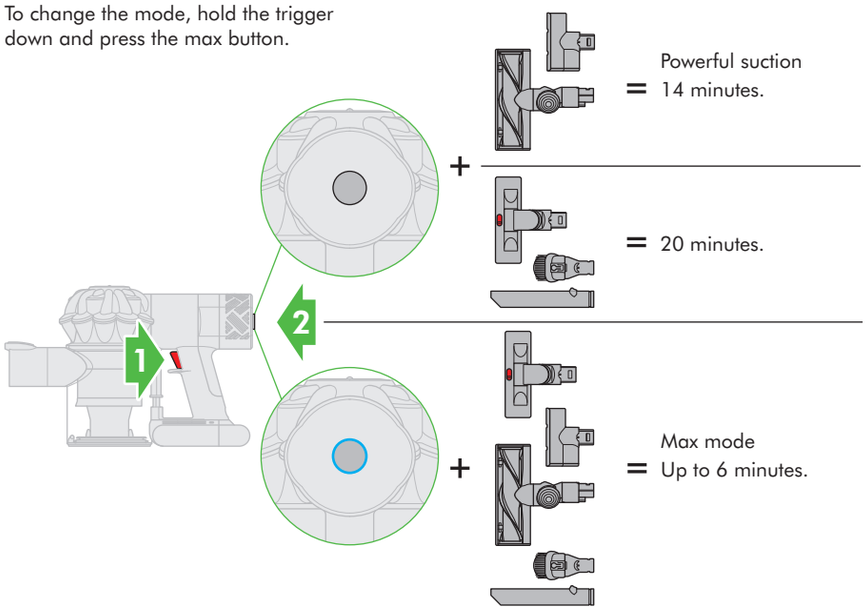


## Diagnostics – main body

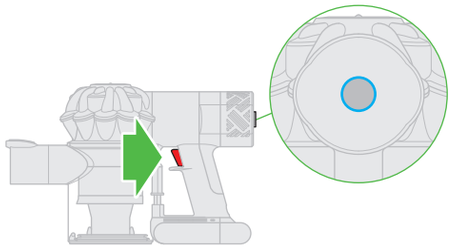

Solid blue: Max 'ON'.

No power, temporary fault (e.g. check filter or for blockages).

Fast flashing blue: No power, temporary fault (e.g. check filter or for blockages).

## Clearing brush bar obstructions

1

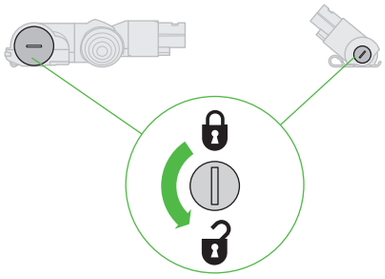

2

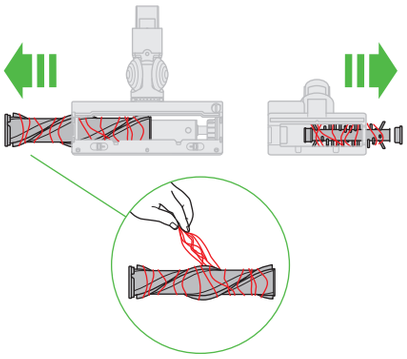

3

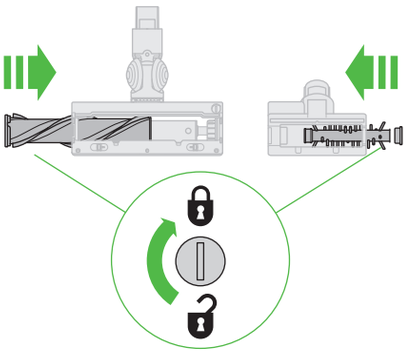

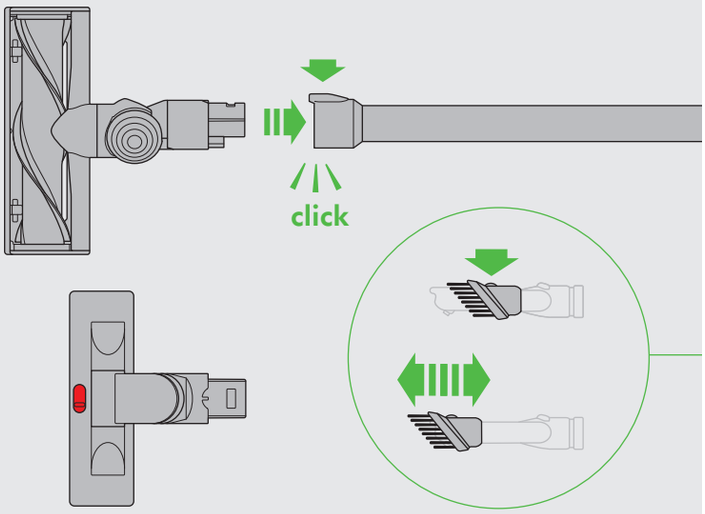


## Hard floor cleaner head

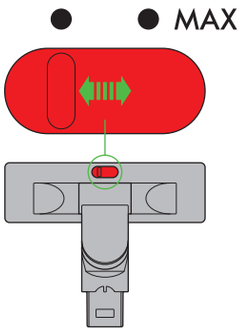

## Diagnostics – battery

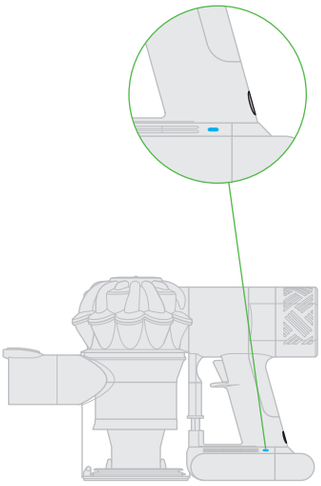

Solid blue: 'ON'.

Flashing blue: No power, charge battery.

Flashing amber: No power, temporary fault (e.g. too hot/cold).

Flashing red: Fault (contact Dyson Helpline).

## Storage and charging in the docking station

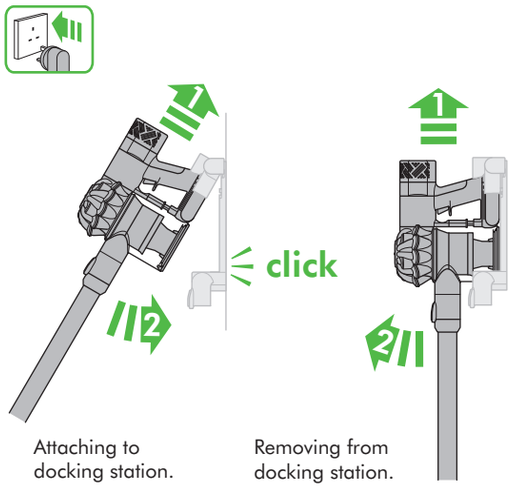


Attaching to docking station.

Removing from docking station.

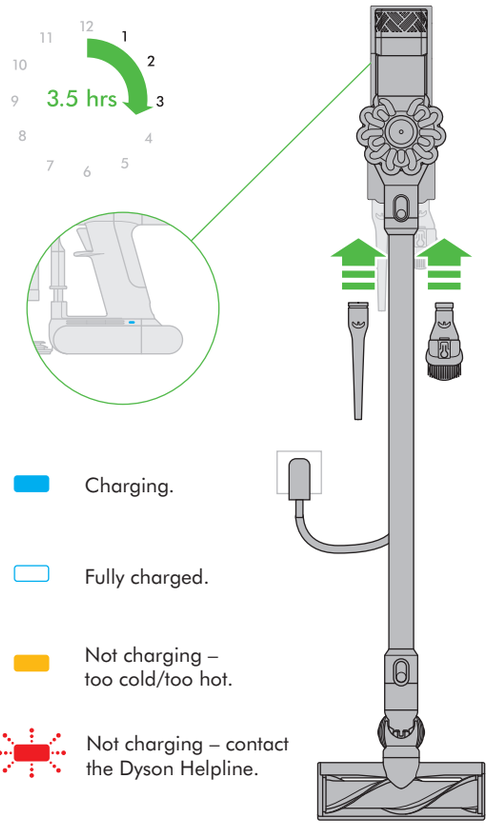


Charging.

Fully charged.

Not charging – too cold/too hot.

Not charging – contact the Dyson Helpline.

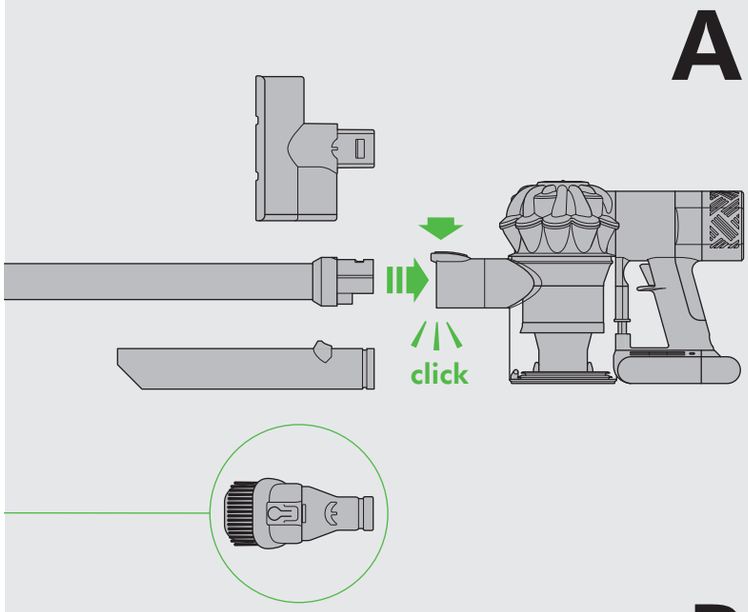


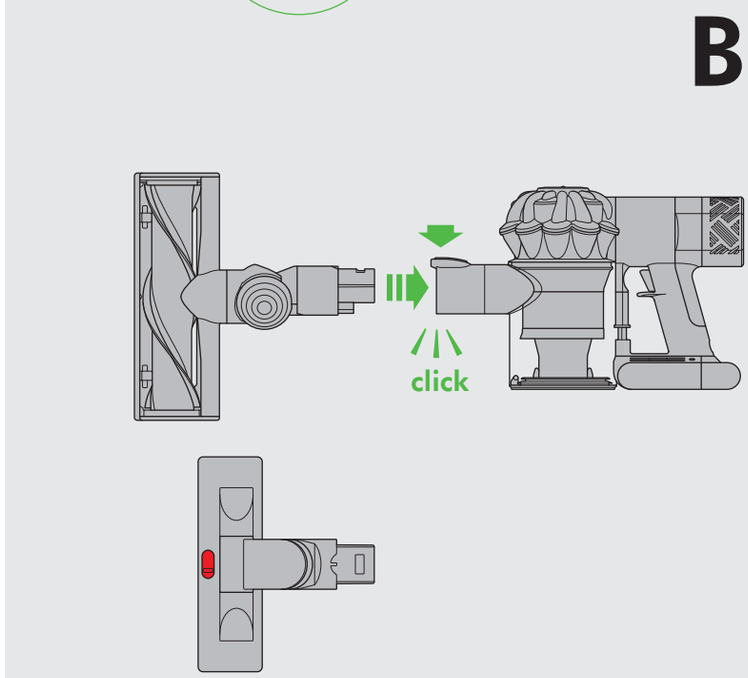


## Emptying

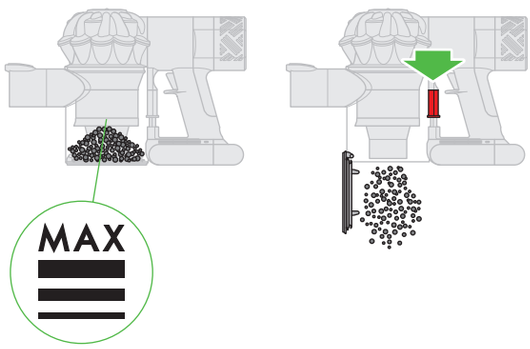

## Looking for blockages

If you hear the motor pulsing, it means there is a blockage in the product. Please look for blockages in the following places:

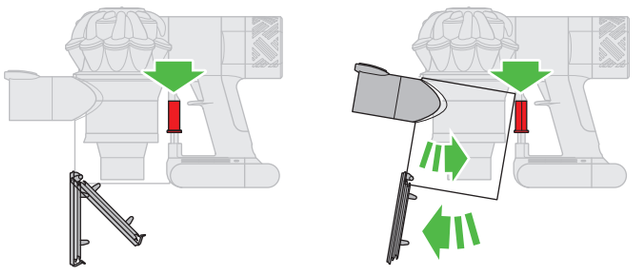

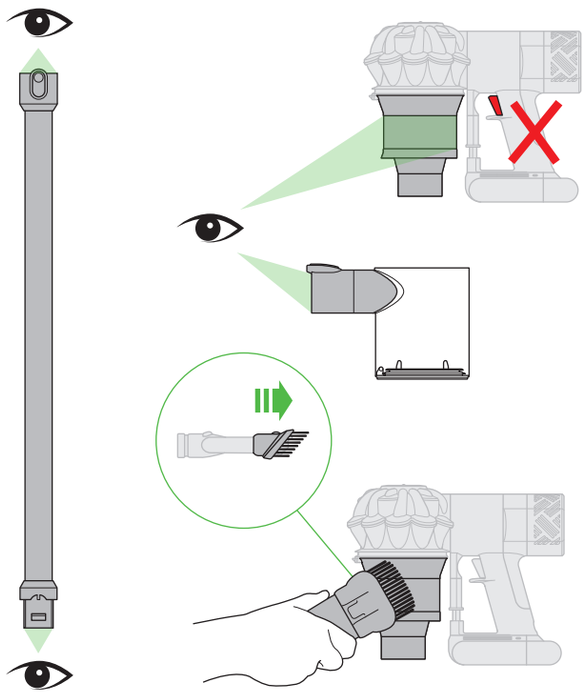

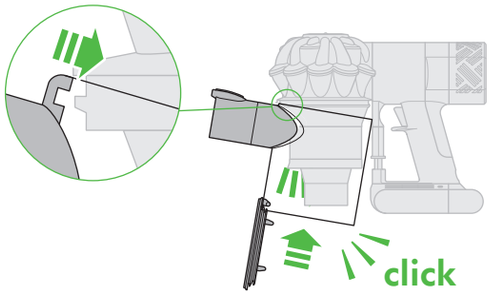


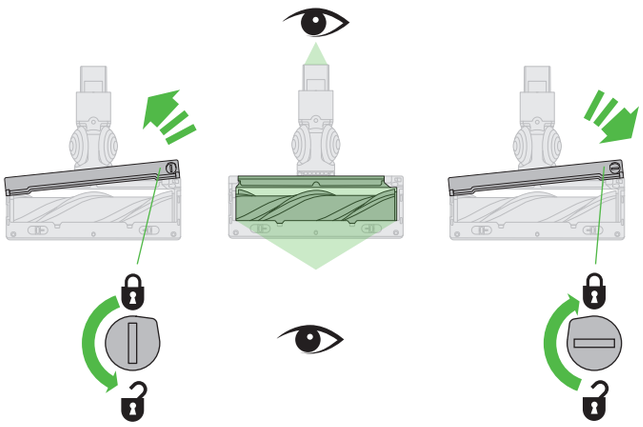

# IMPORTANT!

Wash filters with cold water at least every month.

**A**

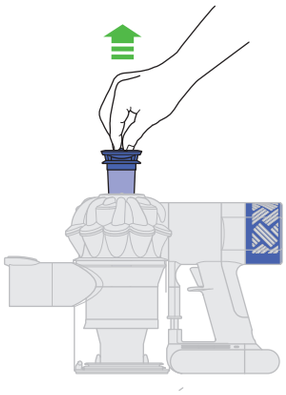

**B**

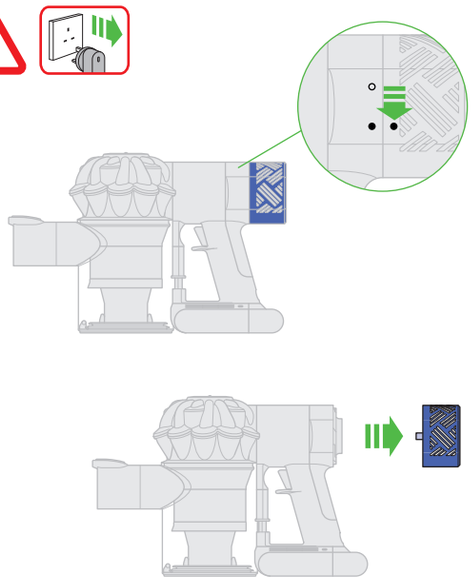

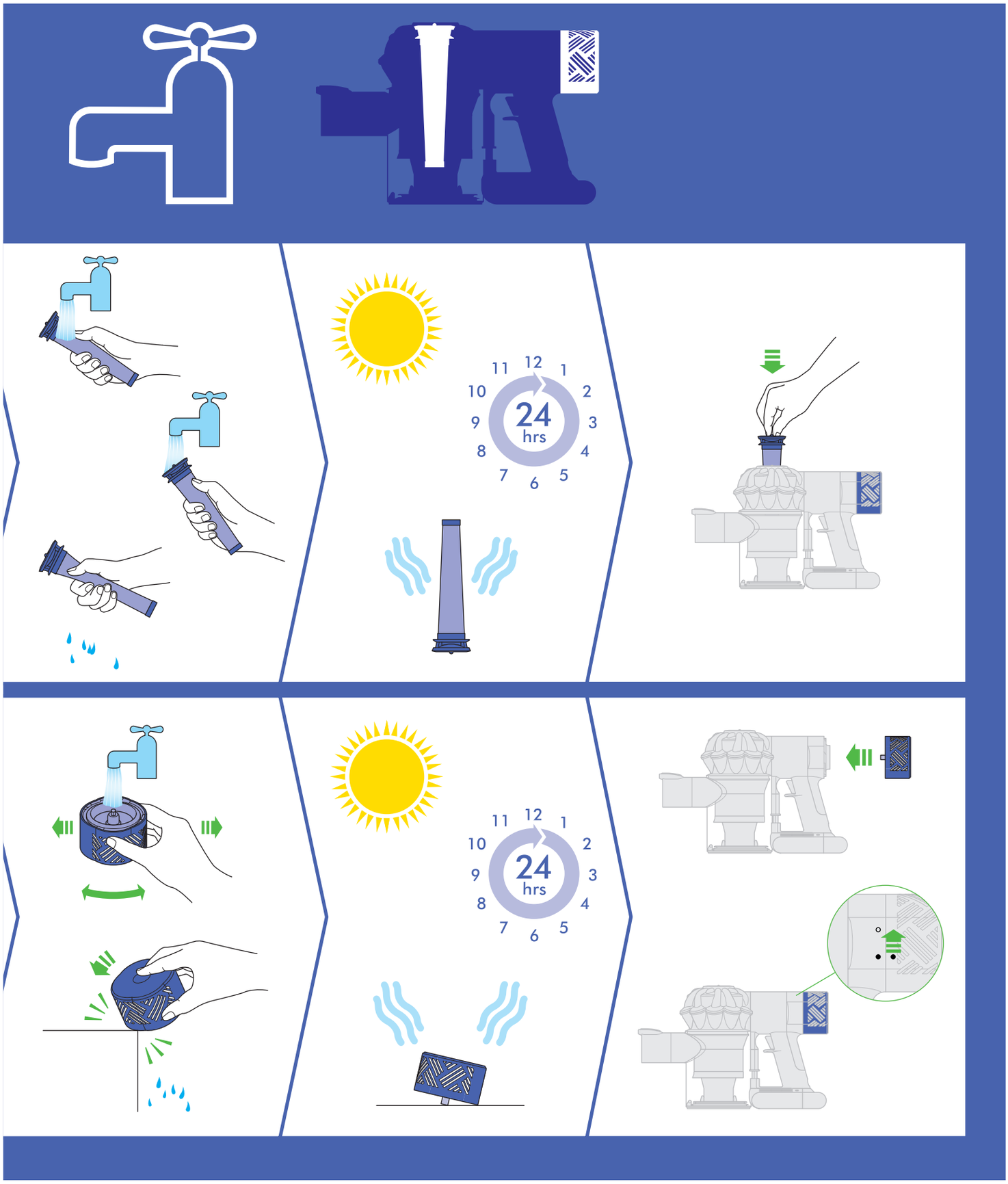
24
hrs
24
hrs

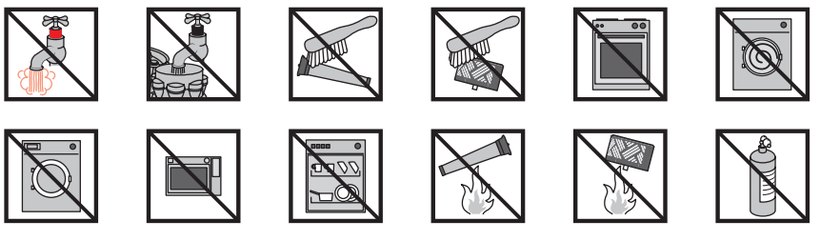

## USING YOUR DYSON APPLIANCE

PLEASE READ THE 'IMPORTANT SAFETY INSTRUCTIONS' IN THIS DYSON OPERATING MANUAL BEFORE PROCEEDING.

## OPERATION

- Do not use outdoors or on wet surfaces or to vacuum water or other liquids – electric shock could occur.
- Ensure the appliance remains upright in use and in storage. Dirt and debris may be released if it is turned upside down.
- Do not operate while checking for blockages.
- For domestic indoor and car use only. Do not use it whilst the car is in motion or while driving.
- To operate the Max mode, hold the trigger down and press the 'Max' button. The 'Max' button will light up.
- To switch off Max mode, hold the trigger down and press the 'Max' button again. Note: The appliance will retain the last used mode. So if you use it in max mode and do not disengage it, the appliance will operate in Max mode when it is next used until you depress the 'Max' button to disengage it.
- This appliance has carbon fibre brushes. Take care if coming into contact with them, as they may cause minor skin irritation. Wash your hands after handling the brushes.
- To watch a short online video visit:
  UK: www.dyson.co.uk/sv05gettingstarted
  ROI: www.dyson.ie/sv05gettingstarted

## HARD FLOOR CLEANER HEAD

The hard floor cleaner head has two modes. To change between the two modes slide the switch as shown:

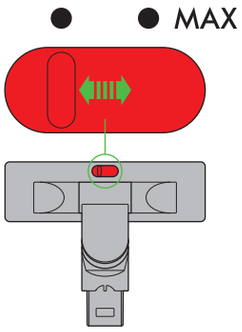


● For debris pick up.

● MAX For fine dust pick up.

## DOCKING STATION INSTALLATION

- Use appropriate mounting hardware for your wall type and ensure that the docking station is mounted securely. Ensure no pipe work (gas, water, air) or electrical cables, wires or ductwork are located directly behind the mounting area. The docking station must be mounted in accordance with regulations and applicable codes/standards (state and local laws may apply). Dyson recommends the use of protective clothing, eyeware and materials when installing the docking station.

## CARPETS OR HARD FLOORS

- Before vacuuming your flooring, rugs and carpets, check the manufacturer's recommended cleaning instructions.
- The brush bar on the appliance can damage certain carpet types and floors. Some carpets will fuzz if a rotating brush bar is used when vacuuming. If this happens, we recommend vacuuming without the motorised floor tool and consulting with your flooring manufacturer.
- Before vacuuming highly polished floors, such as wood or lino, first check that the underside of the floor tool and its brushes are free from foreign objects that could cause marking.

## LOOKING AFTER YOUR DYSON APPLIANCE

- Do not carry out any maintenance or repair work other than that shown in this Dyson Operating Manual, or advised by the Dyson Helpline.
- Only use parts recommended by Dyson. If you do not this could invalidate your guarantee.
- Store the appliance indoors. Do not use or store it below 3°C (37.4°F). Ensure the appliance is at room temperature before operating.
- Clean the appliance only with a dry cloth. Do not use any lubricants, cleaning agents, polishes or air fresheners on any part of the appliance.
- Check the brush bar regularly and clear away any debris (such as hair). Debris left on the brush bar may cause damage to flooring when vacuuming.

## VACUUMING

- Do not use without the clear bin and filters in place.
- Fine dirt such as flour should only be vacuumed in very small amounts.
- Do not use the appliance to pick up sharp hard objects, small toys, pins, paper clips, etc. They may damage the appliance.
- When vacuuming, certain carpets may generate small static charges in the clear bin or wand. These are harmless and are not associated with the mains electricity supply. To minimise any effect from this, do not put your hand or insert any object into the clear bin unless you have first emptied it. Clean the clear bin with a damp cloth only. (See 'Cleaning the clear bin'.)
- Use extra care when cleaning on stairs.
- Do not rest the appliance on chairs, tables, etc.
- Do not press down on the nozzle with excessive force when using the appliance as this may cause damage.
- Do not leave the cleaner head in one place on delicate floors.
- On waxed floors the movement of the cleaner head may create an uneven lustre. If this happens, wipe with a damp cloth, polish the area with wax, and wait for it to dry.

## DIAGNOSTICS – MAIN BODY

When in use, trigger pressed:

Solid blue: Max 'ON'.

Light off: Powerful suction.

Flashing blue: Low battery warning.

Fast flashing blue: No power, temporary fault (e.g. check filter or for blockages).

## EMPTYING THE CLEAR BIN

- Empty as soon as the dirt reaches the level of the MAX mark – do not overfill.
- Ensure the appliance is disconnected from the charger before emptying the clear bin. Be careful not to pull the 'ON' trigger.
- To make emptying the clear bin easier, it is advisable to remove the wand and floor tool.
- To release the dirt, push the red button by the clear bin: Press once to open the bin base. Press a second time to release the clear bin from the main body of the appliance.
- To minimise dust/allergen contact when emptying, encase the clear bin tightly in a plastic bag and empty.
- Remove the clear bin carefully from the bag.
- Seal the bag tightly, dispose as normal.
- Close the clear bin base so it clicks into place and is secure.

## CLEANING THE CLEAR BIN

- Ensure the appliance is disconnected from the charger before removing the clear bin. Be careful not to pull the 'ON' trigger.
- Remove the wand and floor tool.
- Push the red button by the clear bin: Press once to open the bin base. Press a second time to release the clear bin from the main body of the appliance.
- Remove the clear bin carefully.
- Clean the clear bin with a damp cloth only.
- Do not use detergents, polishes or air fresheners to clean the clear bin.
- Do not put the clear bin in a dishwasher.
- Clean the cyclone shroud with the brush on the combination tool to remove lint and dust.
- Ensure the clear bin is completely dry before replacing.
- To replace the clear bin, push the clear bin up and in to the main body of the appliance. It will click into place.
- Close the clear bin base so it clicks into place and is secure.

## WASHING THE FILTERS

- Your appliance has two washable filters; wash the filters at least once a month according to the following instructions to maintain performance. More frequent washing may be required where the user: vacuums fine dust, operates mainly in 'Powerful suction' mode, or uses the machine intensively.

## WASHING FILTER A

- Ensure the appliance is disconnected from the charger before removing the filter. Be careful not to pull the 'ON' trigger.
- Check and wash the filter regularly according to instructions to maintain performance.
- The filter may require more frequent washing if vacuuming fine dust or if used mainly in 'Powerful suction' mode.
- To remove the filter, lift it out of the top of the appliance.
- Wash the filter with cold water only.
- Run water over the outside of the filter until the water runs clear.
- Squeeze and twist with both hands to make sure the excess water is removed.
- Lay the filter on its side to dry. Leave to dry completely for a minimum of 24 hours.
- Do not put the filter in a dishwasher, washing machine, tumble dryer, oven, microwave or near a naked flame.
- To refit, place the dry filter back into the top of the appliance. Make sure it is seated properly.
- To watch a short online video, visit:
  UK - www.dyson.co.uk/sv05filterwash
  ROI - www.dyson.ie/sv05filterwash

## WASHING FILTER B

- To remove the filter, twist anti clockwise to the open position and pull away from the appliance.
- Wash the inside of the filter under cold running water, rotating the filter to ensure all pleats are covered.
- Gently tap the filter against the side of the sink several times to remove any debris.
- Repeat this process 4-5 times until the filter is clean.
- Place the filter upright, with the Max button facing upwards, and leave to dry completely for a minimum of 24 hours.
- To refit, return the filter to the open position and twist clockwise until it clicks into place.
- To watch a short online video, visit:
  UK - www.dyson.co.uk/sv05filterwash
  ROI - www.dyson.ie/sv05filterwash

## LOOKING FOR BLOCKAGES

- Ensure the appliance is disconnected from the charger before looking for blockages. Be careful not to pull the 'ON' trigger.
- Do not operate while checking for blockages. Doing so could result in personal injury.
- Beware of sharp objects when checking for blockages.
- To gain access to blockages in the floor tool, remove the base plate by using a coin to loosen the screw marked with a padlock.
- If you cannot clear an obstruction you may need to remove the brush bar. Use a coin to unlock the fastener marked with a padlock. Remove the obstruction. Replace the brush bar and secure it by tightening the fastener. Ensure it is fixed firmly before operating the appliance.
- This appliance has carbon fibre brushes. Take care if coming into contact with them, as they may cause minor skin irritation. Wash your hands after handling the brushes.
- Refit all parts securely before using.
- Clearing blockages is not covered by your guarantee.

## BLOCKAGES – AUTOMATIC CUT-OUT

- This appliance is fitted with an automatic cut-out.
- If any part becomes blocked the appliance may automatically cut out.
- This will happen after the motor pulses a number of times (i.e switches on and off in quick succession).
- Leave to cool down before looking for blockages.
- Ensure the appliance is disconnected from the charger before looking for blockages. Failure to do so could result in personal injury.
- Clear any blockage before restarting.
- Refit all parts securely before using.
- Clearing blockages is not covered by your guarantee.

## CHARGING AND STORING

- This appliance will switch 'OFF' if the battery temperature is below 3°C (37.4°F). This is designed to protect the motor and battery. Do not charge the appliance and then move it to an area with a temperature below 3°C (37.4°F) for storage purposes.
- To help prolong battery life, avoid recharging immediately after a full discharge. Allow to cool for a few minutes.
- Avoid using the appliance with the battery flush to a surface. This will help it run cooler and prolong battery run time and life.

## DIAGNOSTICS – BATTERY

When in use, trigger pressed:

Solid blue: 'ON'.

Flashing blue: No power, charge battery.

Flashing amber: No power, temporary fault (e.g. too hot/cold).

Flashing red: Fault (contact Dyson Helpline).

When charging battery:

Solid blue: Charging.

Lights off: Charging complete.

Solid amber: Not charging, temporary fault (e.g. too hot/cold).

Flashing red: Fault (contact Dyson Helpline).

## BATTERY SAFETY INSTRUCTIONS

- If the battery needs replacing please contact the Dyson Helpline.
- Use only Dyson chargers for charging this Dyson appliance.
- The battery is a sealed unit and under normal circumstances poses no safety concerns. In the unlikely event that liquid leaks from the battery do not touch the liquid and observe the following precautions:
  Skin contact – can cause irritation. Wash with soap and water.
  Inhalation – can cause respiratory irritation. Expose to fresh air and seek medical advice.
  Eye contact – can cause irritation. Immediately flush eyes thoroughly with water for at least 15 minutes. Seek medical attention.
  Disposal – wear gloves to handle the battery and dispose of immediately, following local ordinances or regulations.

## CAUTION

The battery used in this device may present a risk of fire or chemical burn if mistreated. Do not disassemble, short contacts, heat above 60°C (140°F), or incinerate. Keep away from children. Do not disassemble and do not dispose of in fire.

## DISPOSAL INFORMATION

- Dyson products are made from high grade recyclable materials. Recycle where possible.
- The battery should be removed from the product before disposal.
- Dispose of or recycle the battery in accordance with local ordinances or regulations.
- This marking indicates that this product should not be disposed with other household wastes throughout the EU. To prevent possible harm to the environment or human health from uncontrolled waste disposal, recycle it responsibly to promote the sustainable reuse of material resources. To return your used device, please use the return and collection systems or contact the retailer where the product was purchased. They can take this product for environmentally safe recycling.

## DYSON CUSTOMER CARE

THANK YOU FOR CHOOSING TO BUY A DYSON APPLIANCE

After registering your free 2 year guarantee, your Dyson appliance will be covered for parts and labour for 2 years from the date of purchase, subject to the terms of the guarantee. If you have any questions about your Dyson appliance, call the Dyson Helpline with your serial number and details of where/when you bought the appliance.
Most questions can be solved over the phone by one of our trained Dyson Helpline staff.
Alternatively, visit www.dyson.co.uk/support (UK) or www.dyson.ie/support (ROI) for online help, general tips and useful information about Dyson.
Your serial number can be found on your rating plate which is on the main body of the appliance behind the clear bin.
If your Dyson appliance needs a service, call the Dyson Helpline so we can discuss the available options. If your Dyson appliance is under guarantee, and the repair is covered, it will be repaired at no cost.

## PLEASE REGISTER AS A DYSON APPLIANCE OWNER

To help us ensure you receive prompt and efficient service, please register as a Dyson appliance owner. There are three ways to do this:

- Online at www.dyson.co.uk/register (UK) or www.dyson.ie/register (ROI).
- Telephone the Dyson Helpline on 0800 298 0298 (UK) or 01 475 7109 (ROI).
- Complete the enclosed form and post it to us.

This will confirm ownership of your Dyson appliance in the event of an insurance loss, and enable us to contact you if necessary.

## LIMITED 2 YEAR GUARANTEE

TERMS AND CONDITIONS OF THE DYSON 2 YEAR LIMITED GUARANTEE

## WHAT IS COVERED

- The repair or replacement of your Dyson appliance (at Dyson's discretion) if it is found to be defective due to faulty materials, workmanship or function within 2 years of purchase or delivery (if any part is no longer available or out of manufacture Dyson will replace it with a functional replacement part).
- Where this machine is sold outside of the EU, this warranty will only be valid if the appliance is used in the country in which it was sold.
- Where this machine is sold within the EU, this warranty will only be valid (i) if the appliance is used in the country in which it was sold or (ii) if the appliance is used in Austria, Belgium, France, Germany, Ireland, Italy, Netherlands, Spain or the United Kingdom and the same model as this appliance is sold at the same voltage rating in the relevant country.

## WHAT IS NOT COVERED

Dyson does not guarantee the repair or replacement of a product where a defect is the result of:

- Accidental damage, faults caused by negligent use or care, misuse, neglect, carelessness or operation or handling of the appliance which is not in accordance with the Dyson Operating Manual.
- Use of the appliance for anything other than normal domestic household purposes.
- Use of parts not assembled or installed in accordance with the instructions of Dyson.
- Use of parts and accessories which are not genuine Dyson components.
- Faulty installation (except where installed by Dyson).
- Repairs or alterations carried out by parties other than Dyson or its authorised agents.
- Blockages – please refer to the Dyson Operating Manual for details of how to look for and clear blockages.
- Normal wear and tear (e.g. fuse, brush bar etc.).
- Use of this appliance on rubble, ash, plaster.
- Reduction in battery discharge time due to battery age or use (where applicable).

If you are in any doubt as to what is covered by your guarantee, please contact the Dyson Helpline.

## SUMMARY OF COVER

- The guarantee becomes effective at the date of purchase (or the date of delivery if this is later).
- You must provide proof of (both the original and any subsequent) delivery/purchase before any work can be carried out on your Dyson appliance. Without this proof, any work carried out will be chargeable. Keep your receipt or delivery note.
- All work will be carried out by Dyson or its authorised agents.
- Any parts which are replaced by Dyson will become the property of Dyson.
- The repair or replacement of your Dyson appliance under guarantee will not extend the period of guarantee.
- The guarantee provides benefits which are additional to and do not affect your statutory rights as a consumer.

## ABOUT YOUR PRIVACY

- Your information will be held by Dyson and its agents for promotional, marketing and servicing purposes.
- If your personal details change, if you change your mind about any of your marketing preferences or if you have any queries about how we use your information, please contact the Dyson Helpline.
- For more information on how we protect your privacy, please see our privacy policy on the Dyson website.

# IMPORTANT!

Wash filters with cold water at least every month.

dyson

## DYSON CUSTOMER CARE

Thank you for choosing to buy a Dyson appliance After registering your free 2 year guarantee, your Dyson appliance will be covered for parts and labour for 2 years from the date of purchase, subject to the terms of the guarantee. If you have any questions about your Dyson appliance, call the Dyson Helpline with your serial number and details of where/when you bought the appliance.
Most questions can be solved over the phone by one of our trained Dyson Helpline staff.

Alternatively, visit www.dyson.co.uk/support (UK) or www.dyson.ie/support (ROI) for online help, general tips and useful information about Dyson.

## DYSON CONTACT DETAILS

UK:
**Website:** www.dyson.co.uk/support
**Dyson Helpline:** 0800 298 0298

**Email:** askdyson@dyson.co.uk

**Address:** Dyson Ltd, Tetbury Hill, Malmesbury, Wiltshire, SN16 0RP

ROI:
**Website:** www.dyson.ie/support
**Dyson Helpline:** 01 475 7109

**Email:** askdyson@dyson.co.uk

**Address:** Dyson Ireland Limited, Unit G10, Grants Lane, Greenogue Business Park, Rathcoole, Dublin 24

JN.71917 PN.208833-01-03 13.01.14

www.dyson.com

dyson

# GUARANTEE FORM

Serial number

Date of purchase / /

Country of purchase UK ROI

Title

Surname

First name

Address

Postcode

email

Telephone

Mobile

As a Dyson appliance owner, you can hear about Dyson inventions, services and products before anyone else. If it's okay to contact you, please let us know how we may do this.

| | | |
|---|---|---|
| By mail | Yes | No |
| By phone | Yes | No |
| By email | Yes | No |
| By text message | Yes | No |

We sometimes ask other companies (such as market researchers) to contact owners on our behalf. We do this to get feedback on ideas or ask you to try new products and services. Would this be okay?

Yes No

## 3 EASY WAYS TO REGISTER YOUR FREE 2 YEAR GUARANTEE

### REGISTER ONLINE

Visit our website to register your full parts and labour guarantee online.

**www.dyson.co.uk/register**
**www.dyson.ie/register**

### REGISTER BY PHONE

Call our dedicated Helpline. Open Monday to Friday 8am-8pm & Saturday and Sunday 8am-6pm.

**UK: 0800 298 0298**
**ROI: 01 475 7109**

### REGISTER BY MAIL

Complete and return the form to Dyson in the envelope supplied.